M100002853 PCB.SchDoc

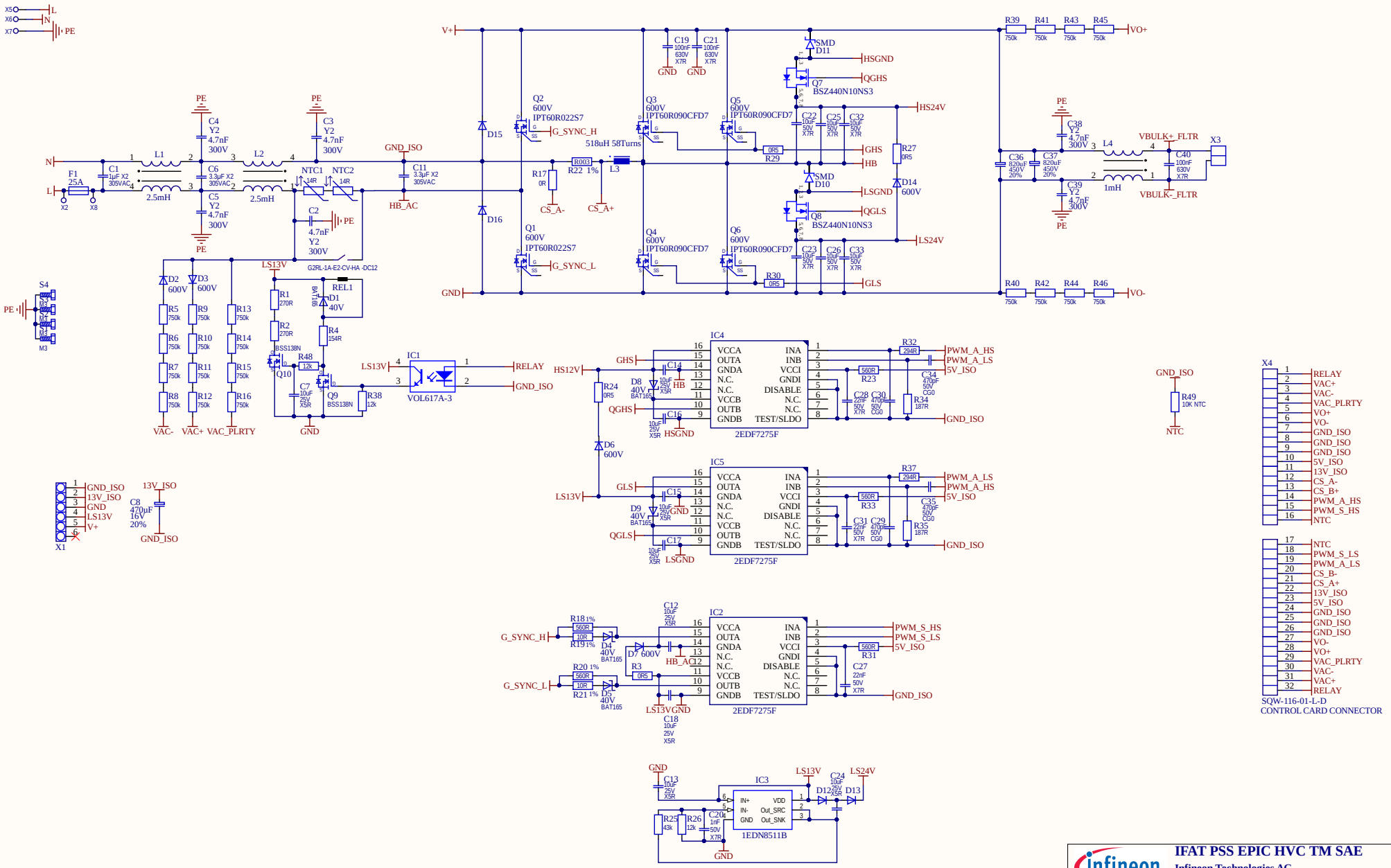

Infineon Technologies Austria AG assumes no liability for re-use, application, customer product design or infringement of patents related to the present material.
and is not considered by Infineon Technologies Austria AG to be part of a finished end product for general consumer uses.
This Evaluation Board/Kit/Module/Layout is intended for use for ENGINEERING DEVELOPMENT, DEMONSTRATION, OR EVALUATION PURPOSES ONLY

IFAT PSS EPIC HVC TM SAE
Infineon Technologies AG
Siemensstraße 2 - 9500 Villach - Österreich

Title	EVAL_3K3W_TP_PFC_CC Main Board
Variant	[No Variations]
Approved	<Appr.>
Size	A3
Document Name	M100002853 PCB.SchDoc
Rel.	
Rev.	<Rev.>
Author	Matteo-Alessandro Kutschak
Date	31.05.2021 Time: 13:49:24
SVN Revision	1174 [Locally Modified]

© Infineon Technologies AG 2021. All Rights Reserved.

Sheet 1 of 1